Technical Data Sheet

Product: Standing Waste.
Product Codes: SW80 and SW100.

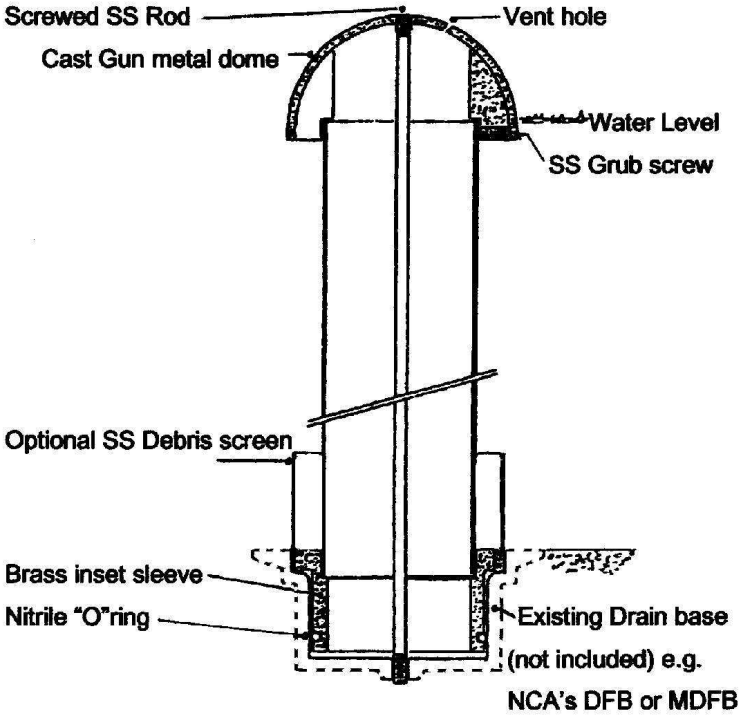

- NCA Standing Waste provides combined overflow control and the ability to empty the pool without the use (and cost) of an inline Stop Valve.
- NCA Standing Wastes are designed to fit NCA Drain Bases – refer to technical data sheets on DFB and MDFB drain bases.
- NCA offer 80 and 100 mm versions (model numbers SW80 and SW100).
- Diagram shows the robust construction which is resistive to vandal attack.
- An optional SS mesh adaptor is available to screen debris when emptying the pool. This SS Debris Screen fits around the Standing Waste tube and into the Drain Base.
- Standing wastes are made to suit the Standard pool depth of 300mm and can be made to suit deeper pools.
- Draining the pool can be achieved in 3 simple sets.
  1. loosen grub screw,
  2. unscrew dome and SS longthread,
  3. remove copper tube and brass inset.

Neville Crocker Australia, Unit 2, 32 Miles St, Mulgrave, Vic 3170, Australia. www.ncawaterfeatures.com.au
Telephone 613 9560 5333 Fax: 613 9561 6172 e-mail: enquiries@ncawaterfeatures.com.au
NCA reserves the right to improve design which may affect dimensions – please check with us.